CONSTRUCTION CHANGE AUTHORIZATION/CHANGE ORDER

Date:	12/20/2022		
Architect/Engineer	Paul Stresing Associates	**Change No:**	**7**
To (Contractor):	BBI Construction Management, Inc.	**Project:**	Camp Cusowilla Maintenance & Accesability Improv.
Address:	4639 NW 53rd Avenue Gainesville, Florida 32653	**BBI Project #:**	520

PROPOSED CHANGE		CM Contingency (SOV Line item #35)	ODP Tax Savings	Bid Package Savings (SOV Line item #36)	Construction Contract	
No.	**Description**				**DECREASE**	**INCREASE**
7-1	Move $5,610.75 from line item #35 Project Contengency to Line Item #12 RCA (Dock) and Increase contract by balance $149,868.25	($5,610.75)				$149,868.25
7-2	Addition of roof structure over water treatment equipment					$5,048.86
7-3	Addition of fencing around water treatment equipment and around outside air condesning units at Main Lodge					$4,701.78
7-4	Purchase and install of limited scope of kitchen equipment: (1) SS 3-compartment sink, (1)wall mount faucet set, (2) mobile heated cabinet and (1) 6 burner with griddle and 2 oven gas range.					$11,827.68
7-5	Added quarry tile base repair and LVT provide and install at directors office in Main Lodge					$3,900.00
7-6	Additional Doors and hardware adjustment, additions. Including all labor to complete					$12,645.32
7-7	Additional General conditions & Staffing for increased scope to the project					$27,235.60
7-8	Fee (9%) for additional scope of work					$18,964.13
CONTRACT DATE:	02/01/22	**($5,610.75)**	**$0.00**	**$0.00**	**$0.00**	**$234,191.62**
ORIGINAL CONTRACT SUM:	$2,637,371.00					

Contract Time:	**Days**	**Complete***							
Present Contract:	347	01/14/23	**Present:**	$5,610.75	$0.00	$0.00	**Present Sum:**	$2,637,371.00
This Change:	180		**Change:**	($5,610.75)	$0.00	$0.00	**Add / (Deduct):**	$234,191.62
New Contract Time:	527	07/13/23	**New:**	$0.00	$0.00	$0.00	**New Sum:**	$2,871,562.62

* Substantial Completion Date

THIS CHANGE ORDER IS AN AMENDMENT FOR CONSTRUCTION MANAGEMENT (CM) SERVICES, AND ALL CONTRACT PROVISIONS SHALL APPLY UNLESS SPECIFICALLY EXEMPTED. THE AMOUNT AND TIME CHANGES DESIGNATED ARE THE MAXIMUM AGREED TO BY BOTH THE OWNER AND THE CM FOR THIS CHANGE. IN CONSIDERATION OF THE FOREGOING ADJUSTMENTS IN CONTRACT TIME AND CONTRACT SUM, THE CM HEREBY RELEASES OWNER FROM ALL CLAIMS, DEMANDS, OR CAUSES OF ACTION ARISING OUT OF THE TRANSACTIONS, EVENTS AND OCCURENCES GIVING RISE TO THIS CHANGE ORDER. THIS WRITTEN CHANGE ORDER IS THE ENTIRE AGREEMENT BETWEEN OWNER AND CM WITH RESPECT TO THIS CHANGE ORDER. NO OTHER AGREEMENT OR MODIFICATION SHALL APPLY TO THIS CONTRACT AMENDMENT UNLESS EXPRESSLY PROVIDED HEREIN.

By: _____ DATE _____
ARCHITECT / ENGINEER

By: _____ DATE 12/20/2022
CONSTRUCTION MANAGER

By: _____ DATE _____
OWNER

P R O P O S A L

Shore Builders Inc
274 NW 137th Drive,
Suite 100
Newberry, FL 32669
(352) 339-3322

Change Authorization 7-1

Camp Cuscowilla: Project 3 - Swamp Walk Chris Trowell
210 SE 134th Ave
Micanopy,FL

Estimate #	1406
Date	11/23/2022

Description
- Provide labor to construct as per plans for Camp Cuscowilla swamp walk
- Provide project supervision: > To ensure quality assurance of work completed > Maintain a construction schedule > Maintain a safe work environment > Request the necessary inspections stated on permit card
- Provide roll-off container for construction debris
- Provide marine grade lumber: > 9" diameter piles > 2" x 8" Joist > 2" x 8" Ledgers > 2" x 6" Decking
- Provide stainless steel framing hardware
- Provide labor and material to install 540 lf of ADA mesh handrail
- Concrete for pile setting
- Provide skid steer used for pile setting
- Provide excavator to install piles per drilling

Conditions:
- Prices only guaranteed for 14 days
- All prices are subject to permitting approval and engineering.
- Prices subject to increase in lumber
- Prices subject to fuel surcharge
- This proposal excludes electric.
- Change orders made after a signed contract are to be agreed upon and paid in full upfront.
- Payment schedule: TBD
If the terms of this proposal meet your approval, please indicate your acceptance. Once the proposal has been agreed upon by both parties, a **full contract** will be sent via DocuSign. Thank you for the opportunity to present this proposal. We look forward to starting this job for you.

Sub Total	$155,479.00
Total	$155,479.00

N O T E S

Camp Cuscowilla

Nature Walk

210 SE 134TH AVE
MICANOPY, FL 32667

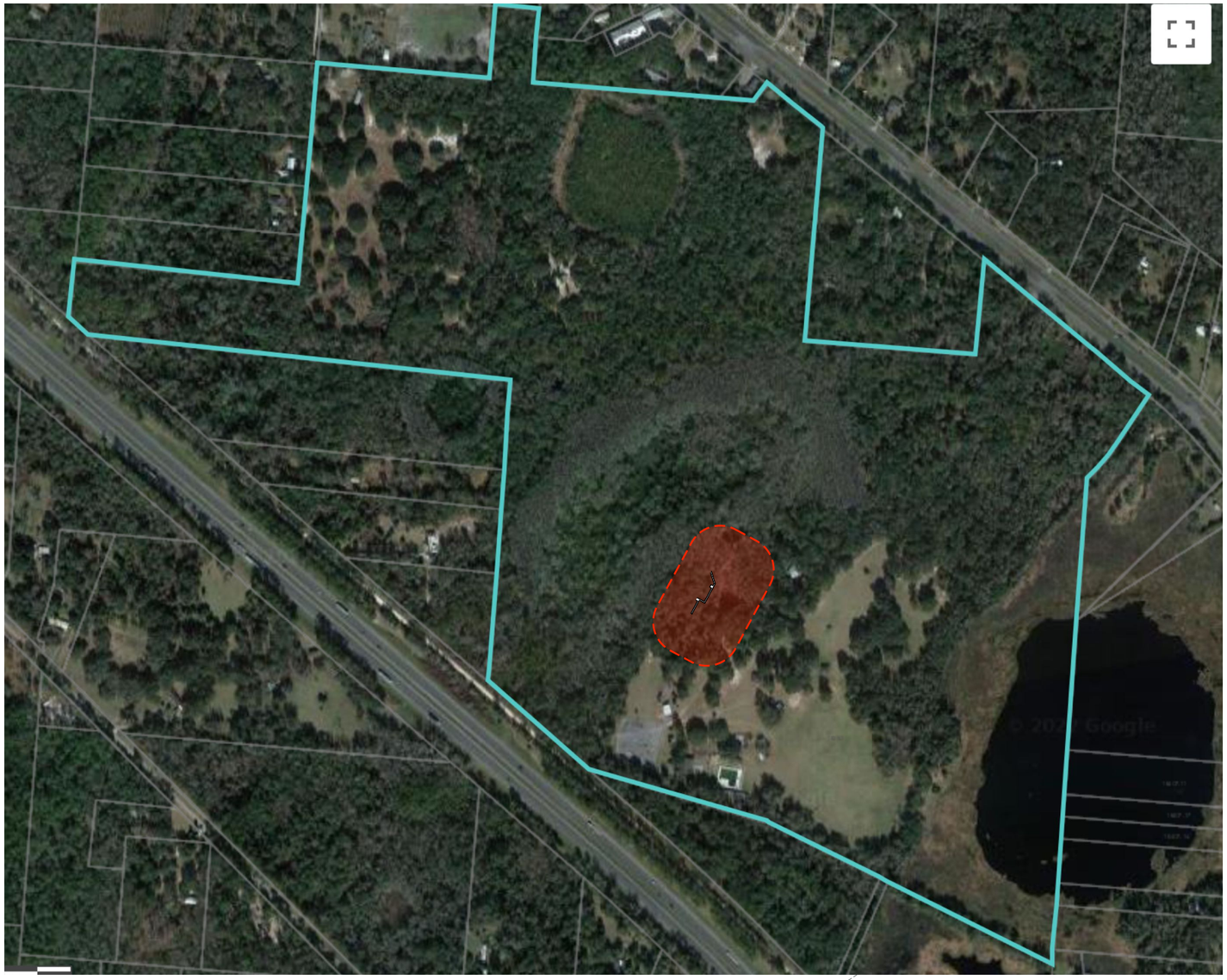

SITE PLAN
Scale: 1' = 600'

Project Description

Approx. 4' x 248' Timber walkway (100 lbs. / ft² live load)
(2) 8' x 10' observation platforms (100 lbs. / ft² live load)

Table of Contents

Cover Sheet: Site Plan
Page 1: Walkway Plan / Walkway Elevation
Page 2: Foundation Plan/ Framing Plan
Page 3: Framing Details/ Elevation details
Page 4: Framing Details/ Sections

Notes

Quantity:	Boardwalk-	1146 s.f.
	Handrail-	524 l.f.
Design Loads:	Walkway-	100 lbs./sqft Live Load, 10 lbs/sqft Dead Load
	Piles-	Set to 6 kip Ultimate capacity
Dock:	Piles-	9"Ø Butt piles, 2.50 cca treatment
	Lumber-	All no. 2 or better, 0.60 CCA treatment
	Decking-	2x6, 0.15 CA-c treatment (2) #10 x 3" stainless steel deck screws
	Hardware-	All bolts hot dipped galvanized All screws stainless steel #10 x 3" deck screw
Handrails:	Post-	PT 4x4 posts (2) 3/8" HDG Carriage bolts to outer joist
	Top Cap-	PT 2x6 (2) PT 2x4 horizontal rails
	Coated Wire Mesh-	2"x2", 12.5 ga. PVC coated, black

Camp Cuscowilla Nature Walk
210 SE 134TH AVE
MICANOPY, FL 32667

Drawn By:
SE Boathouse LLC

Date:
November 18, 2022

Date Modified:

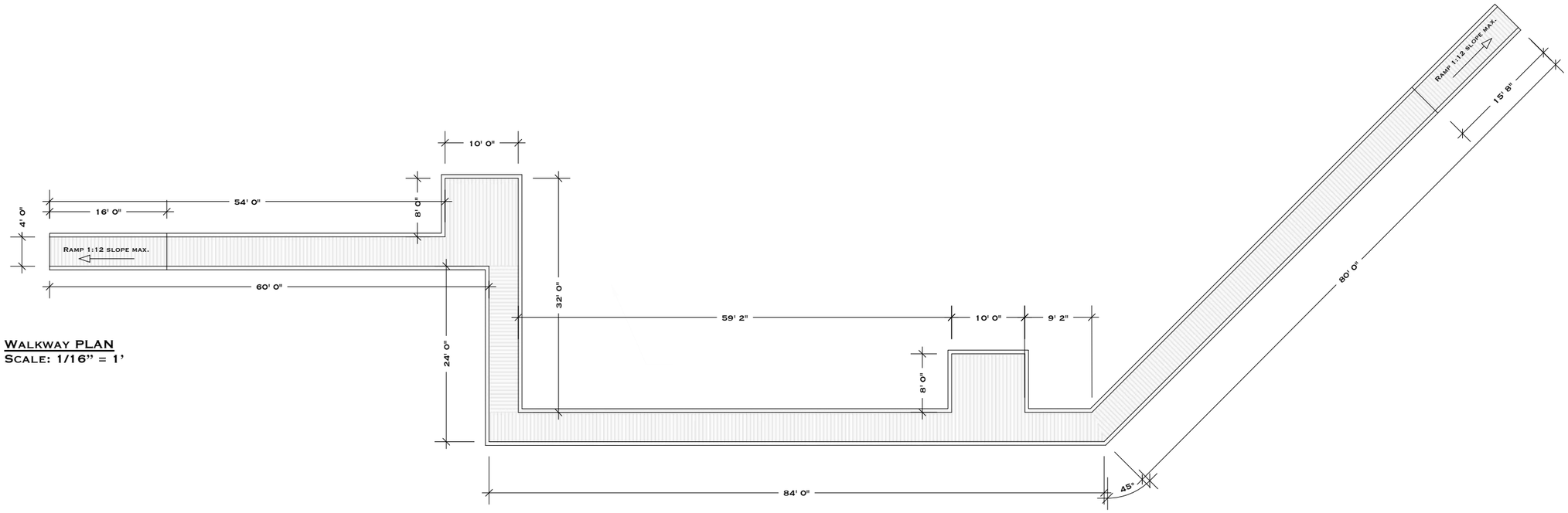

Walkway PLAN
Scale: 1/16" = 1'

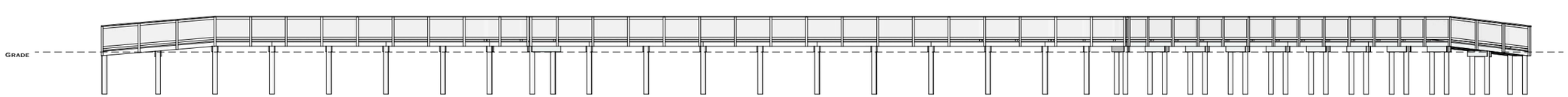

Walkway SE Elevation
Scale: 1/16" = 1'

Camp Cuscowilla Nature Walk

210 SE 134TH AVE
MICANOPY, FL 32667

Drawn By:
SE Boathouse LLC

Date:
November 18, 2022

Date Modified:

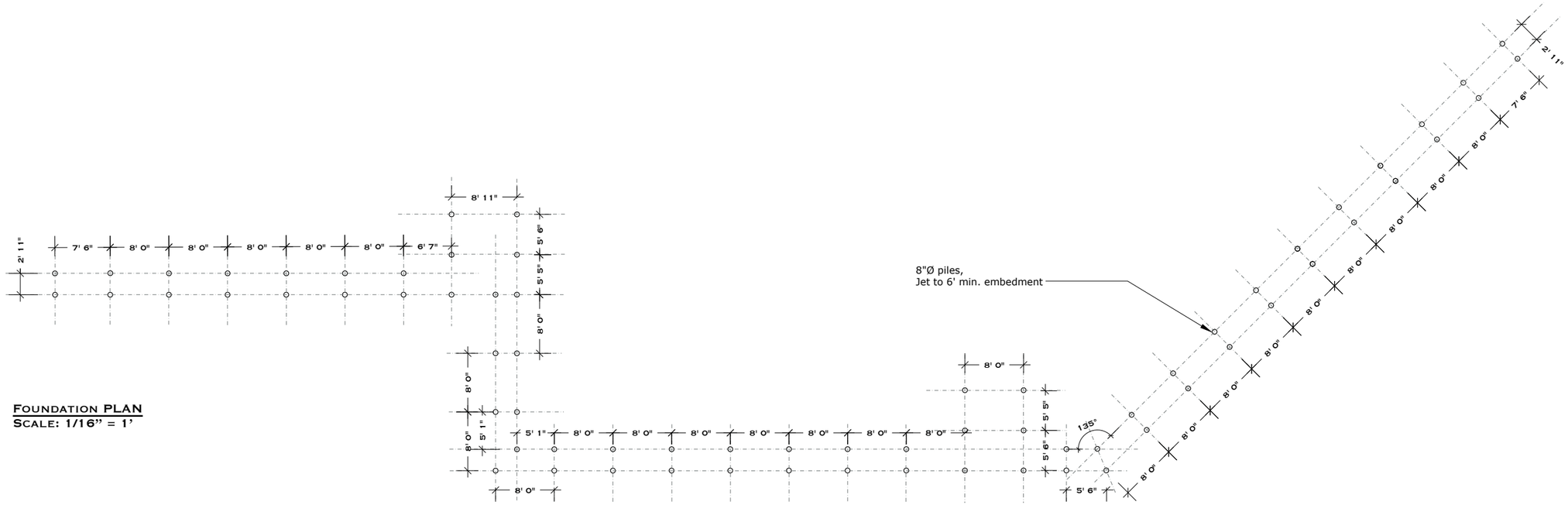

FOUNDATION PLAN
SCALE: 1/16" = 1'

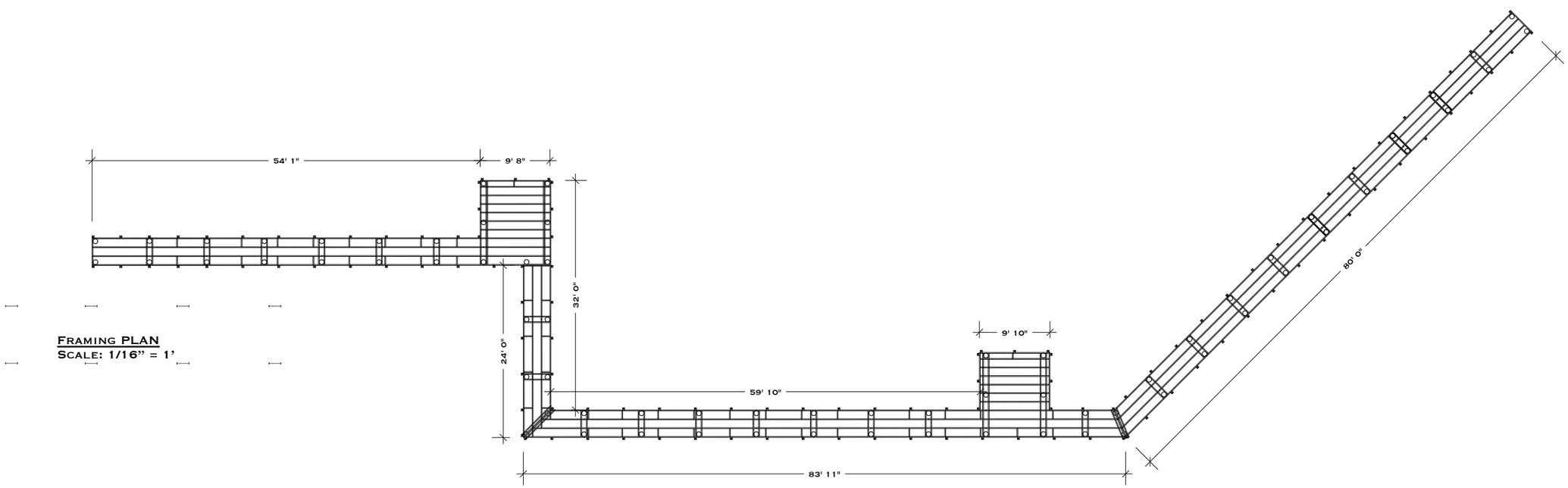

FRAMING PLAN
SCALE: 1/16" = 1'

Camp Cuscowilla Nature Walk

210 SE 134TH AVE
MICANOPY, FL 32667

Drawn By:
SE Boathouse LLC

Date:
November 18, 2022

Date Modified:

*All lumber syp no. 2 or better, ,60 CCA tratement
Decking to be .15 Ca-c treatment

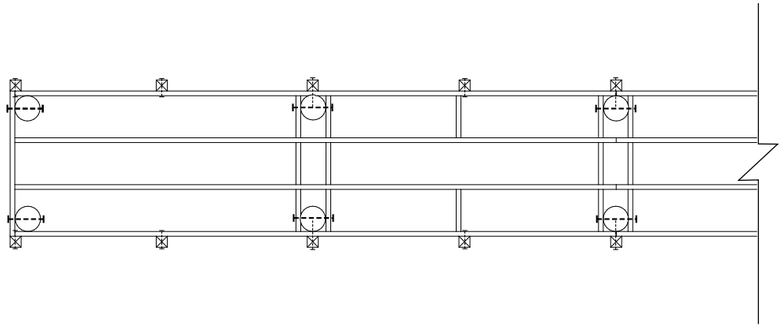

Gangway connection Framing Plan
Scale: 1/4" = 1'

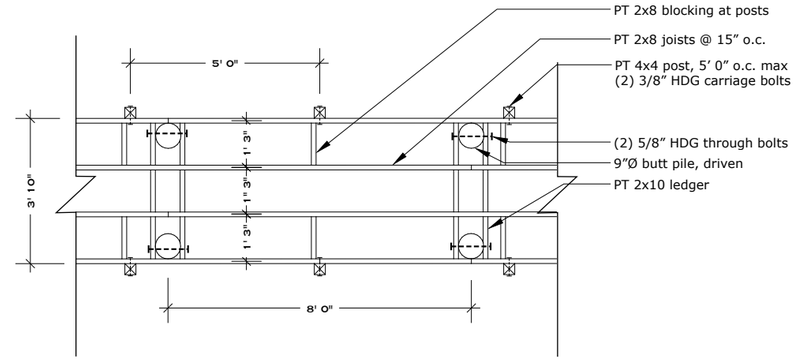

TYP. Walkway Framing Plan
Scale: 1/4" = 1'

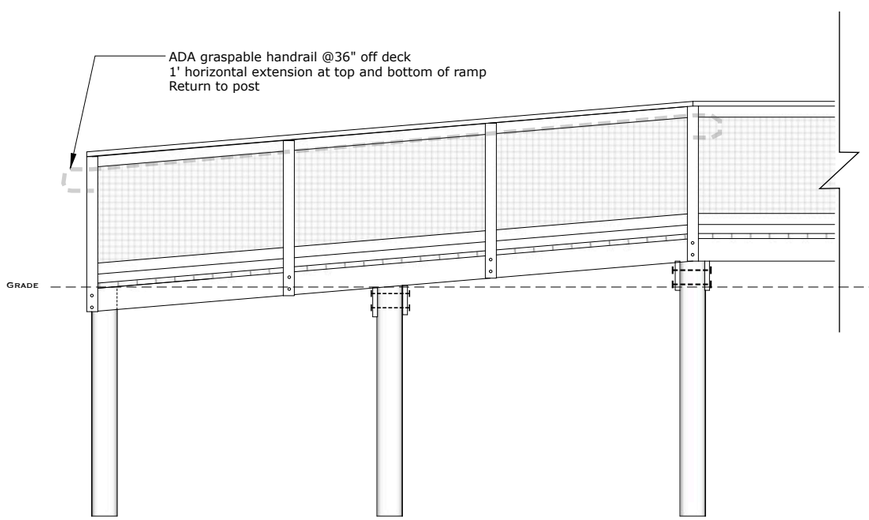

Ramp elevation
Scale: 1/4" = 1'

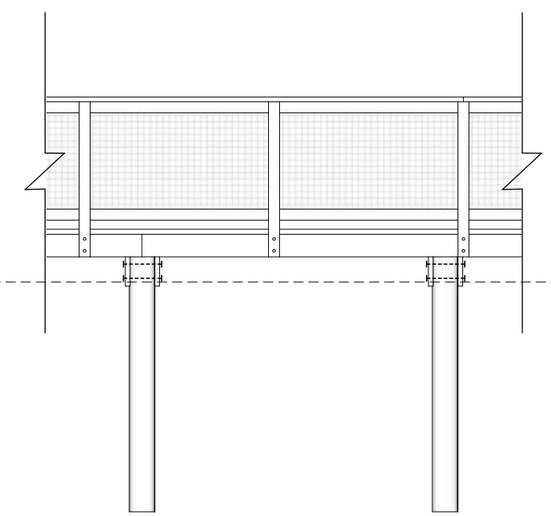

Typical Walkway elevation
Scale: 1/4" = 1'

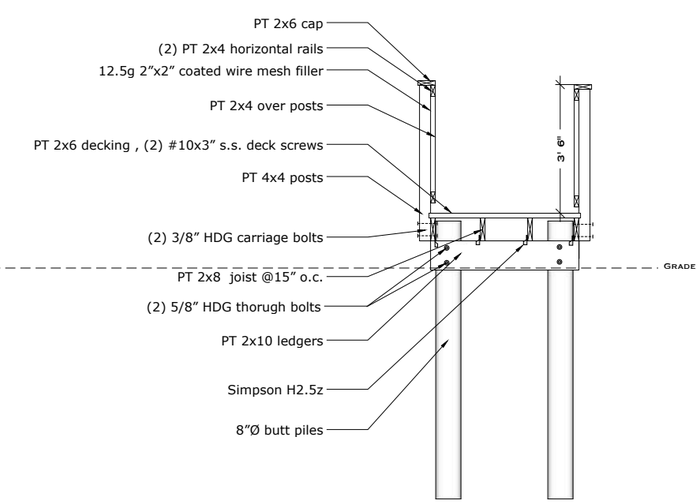

Typical Walkway Section
Scale: 1/4" = 1'

Floating Dock Section
Scale: 1" = 10'

Camp Cuscowilla Nature Walk

210 SE 134TH AVE
MICANOPY, FL 32667

Drawn By:
SE Boathouse LLC

Date:
November 18, 2022

Date Modified:

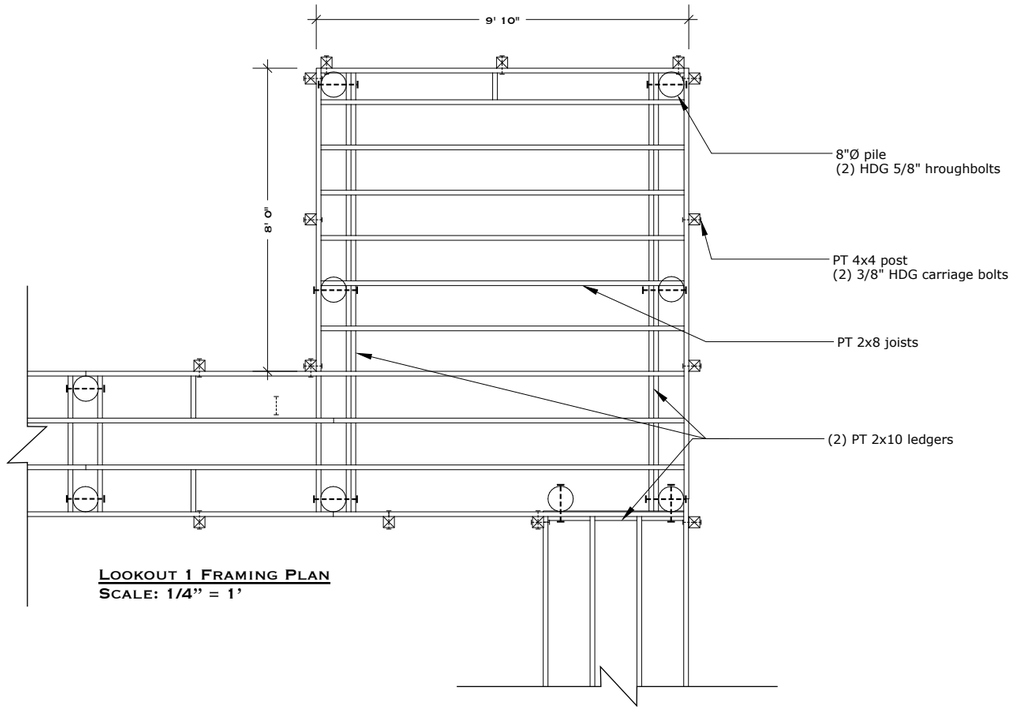

Lookout 1 Framing Plan
Scale: 1/4" = 1'

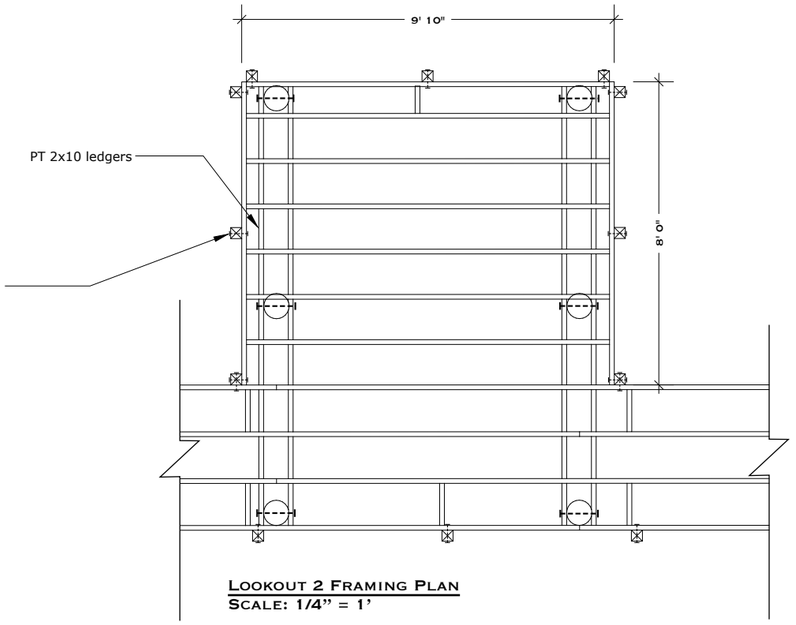

Lookout 2 Framing Plan
Scale: 1/4" = 1'

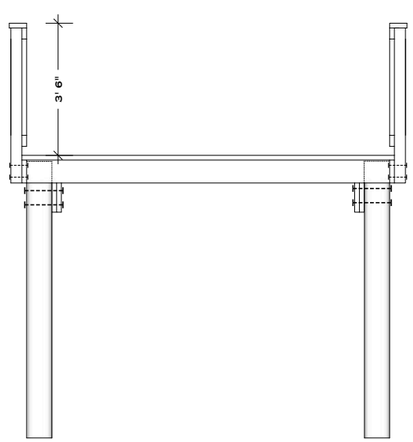

Lookout 1 section
Scale: 1/4" = 1'

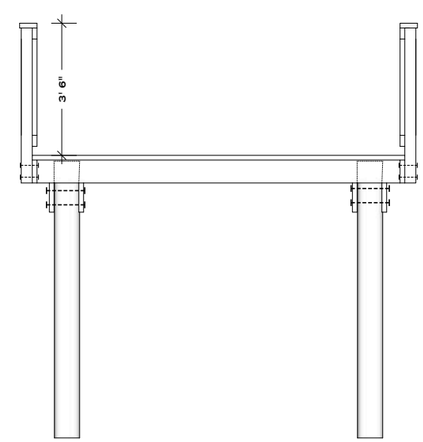

Lookout 2 section
Scale: 1/4" = 1'

Camp Cuscowilla Nature Walk

210 SE 134TH AVE
MICANOPY, FL 32667

Drawn By:
SE Boathouse LLC

Date:
November 18, 2022

Date Modified:

Change Authorization 7-2

Reed's Metals of Cross City

4020 SW 449th Street
Horseshoe Beach FL, 32648
Phone: 352-498-0100

BUILDING QUOTATION TB275754

ORDER NO.	TB275754
CUSTOMER ACCT#	BCM001
QUOTE DATE	05/25/22
QUOTE EXPIRES	06/08/22

QUOTE TO

BBI CONSTRUCTION MANAGEMENT
4639 NW 53RD AVE
GAINESVILLE, FL 32653

PH: (321) 332-2375 FAX:

SHIP TO

BBI - CAMP CUSCOWILLA
210 SE 134TH AVE
MICANOPY, FL 32667 (Alachua)

PH: (352) 538-4231

Site Contact: Chris Trowell (352) 538-4231

Customer ID	Good Through	Terms	PO#	Sales Person
BCM001	06/08/22	50% Down Net Due	Camp Cuscowilla	HSB Building Sales

Line	Pack No.	Item - Description	Qty	Length	Total LF of Material	Tot Wt	Unit Price	Amount
1		PROJECT - REED'S BUILDING PROJECT - SEE DESCRIPTION Residential 12' x 16' x 9'L/11'H Reed's Custom Vertical Single Slope Tubing Carport WIDTH: [12] ft lean to truss measured outside to outside of post [excluding overhangs] LENGTH: [16] ft ridge line measured outside to outside of post [excluding overhangs] LOW SIDE EAVE HEIGHT: [9] ft to top of post HIGH SIDE EAVE HEIGHT: [11] ft to top of post - 2:12 pitch - Constructed out of 2"x3"x14ga galvanized rectangular tubing - 29ga. Galvalume Residential Metal Roofing Panel - Vertical (25yr warranty) - 4inch panel overhang on eaves - Mobile Home Anchors - 5' centers Price includes all tube framing, panels, trims, accessories and necessary hardware. (1) [PAPER] or [DIGITAL] SIGNED & SEALED Set of GENERIC engineered plans for FLORIDA included at reduced cost ($350 per set), min 140MPH wind speed. Site specific plans additional cost	1				$3,249.58 / EA	$3,249.58
2		DEL-NT - DELIVERY CHARGE NON-TAXABLE	73				$3.00 / EA	$219.00
3		ABOUTUSCUSTOMER - How did you hear about us - Repeat/Current Customer	1				$0.00 / EA	$0.00

The Metal Panels and Trim quoted are manufactured with either AZ50 or AZ55 substrate, complying with ASTM A755 and ASTM A792 standards as required to meet both Residential and Commercial Building and Fire Code requirements.
BEWARE: Some competitive offerings do not meet these standards.

Fuel Surcharge	**52.81**
Non Taxable Sub-Total	**219.00**
Taxable Sub-Total	**3,249.58**
Tax Amount	**227.47**
Total Quoted	**3,748.86**

I have reviewed this quote and verified the items, lengths, quantities, and colors are correct.

To Order Please Sign _____ Date _____

Thank you for your business!

Total Weight	0.0	Total Length	0.00

Print Date: 05/25/22 16:14:00

POWERED BY ADJUTANT

Change Authorization 7-2

LEVY STEEL LLC
370 N Hathaway Ave,
Bronson, FL. 32621
levysteelllc@gmail.com
(352) 210-4402

Estimate:
#0001260

12/14/22

TO BBI Construction Management
4639 NW 53rd Ave
Gainesville, FL 32653

SALESPERSON:	JOB:	PAYMENT TERMS:	START DATE:
Brianna Stemple	TB-	Balance Upon Completion	

QTY	DESCRIPTION	UNIT PRICE	LINE TOTAL
1	Single Slope Carports	$1,300.00	$1,300.00
		Subtotal	-
		Total	$1,300.00

Thank You for Your Business!

Change Authorization 7-3

E S T I M A T E

All Florida Enterprises
22515 W. Newberry Rd
Newberry, FL 32669
(352) 472-3550

Sales Representative
Jimmy Nelson
(352) 213-0667
jimmy@allfloridaenterprises.com

BBI Construction Management (352) 338-2073
Job #2340 - Camp Cuscowilla
210 SE 134th Ave
Micanopy, FL 32667

Estimate #	11327
Date	10/18/2022

Description
Supply and Install up to 106' of 6'high Commercial Grade Galvanized Chain Link Fencing including (2) 4' wide single gates. Materials Include: - 72" 9 GA. GAW (2" Mesh) KK CHAIN LINK - 1 5/8" SS40 PIPE DOM TOP RAIL - 2 1/2" X 8' SS40 PIPE DOM TERMINAL POST - 2" X 8' SS40 PIPE DOM LINE POST Customer must ensure staked property boundaries or mark fence location, and fence line cleared of vegetation and obstructions No site work or clearing included

Unless otherwise noted, down payment of 50% of $4,701.78 required

Sub Total	$4,701.78
Total	$4,701.78

N O T E S

ALL FLORIDA ENTERPRISES
22515 W. Newberry Rd.
Newberry, FL 32669
(352) 472-3550

JOB SKETCH

106' - INSTALL COM-6' 9 Ga BTW Fencing

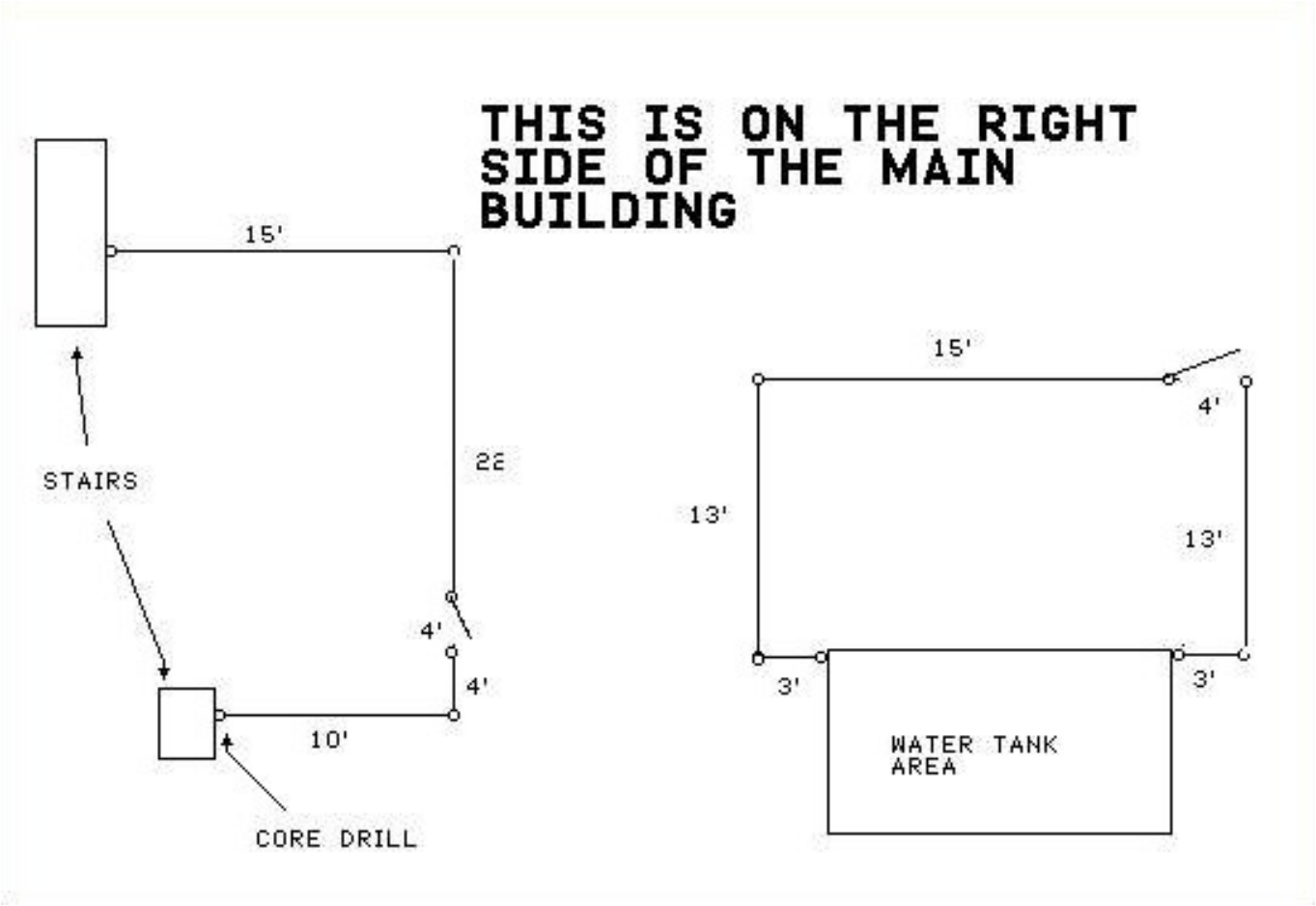

10/18/2022

TERMS & CONDITIONS

All Florida Enterprises Solutions, Inc. doing business as All Florida Enterprises (AFE) and Contractor/Owner (Customer), enter into this Contract as of the date written above. AFE and Customer agree to abide by the terms and conditions herein. AFE agrees to provide materials and/or labor in accordance with the description above. Either party may revoke this contract by providing written notice 3 days prior to the earliest of commencement of construction, delivery of materials to the job site, or the ordering of materials on behalf of Customer. If this Contract is used as an estimate, the estimate shall be valid for 30 days (unless extended by AFE in writing). Upon signing by both parties, the estimate becomes a valid contract, and represents the entire agreement between the parties.

The full amount of this contract along with any additional charges will become payable by Customer upon completion of all work (or if materials only, delivery of the materials to Customer) whether or not it has been invoiced. All materials will remain the property of AFE until all invoices pertaining to this job are paid in full. Customer agrees to pay all interest and any costs (including reasonable attorney fees) incurred in the collection of this debt. Before AFE supplies additional materials or performs additional or changed work involving additional time or expense, Customer and AFE shall execute a written Change Order describing the change and the amount of, or method of determining, extra compensation.

Responsibility for compliance with local regulations and obtaining any required permits and locating and marking property pins shall rest with Customer. AFE will assist the customer, upon request, in determining where the fence is to be erected, but under no circumstance does AFE assume any responsibility concerning property lines or in any way guarantee their accuracy. If property pins cannot be located, it is recommended that the customer have the property surveyed. If upon arrival to Customer's property, the site is not prepared as represented by Customer, AFE may refuse to begin work and Customer may incur a trip charge of $150. AFE may assume the responsibility for having underground public utilities located and marked. However, AFE assumes no responsibility for unmarked sprinkler lines, or any other unmarked buried lines or objects. Customer will assume all liability for any damage caused by directing AFE to dig in the immediate vicinity of known utilities.

Customer expressly agrees to bear any risk of damage to, or loss of, any materials delivered or work performed by AFE under this Contract, regardless whether such damage or loss results from theft, misuse, fire, flood, or any other cause except the negligence of AFE. Customer also expressly agrees to reimburse AFE for any damages or costs incurred by AFE as a result of such damages or loss. AFE shall not be liable for any damages for delays caused by acts of God, acts of Customer, acts of Customer's subcontractors, agents or suppliers, acts of public agencies, inspectors or public utilities, strikes, inclement weather, fires, inability to obtain materials from their regular sources, extra work or other contingencies unforeseen by AFE.

Unless otherwise specified, for a period of one year after completion of work done under this Contract, AFE warrants that materials supplied under this Contract are of good quality and free from material defects, that any work performed under this Contract will be performed in a workmanlike manner, and that under this warranty, AFE will, at its own expense and option, repair or replace defective materials and correct defective work directly attributable to the fault of AFE.

Signature area

Customer Signature / Date: _____

AFE Signature / Date: _____

Change Authorization 7-4

Your Shopping Cart

Checkout

Krowne 18-706L 22 1/2"H Wall Mount Pre Rinse Faucet - 1 1/5 GPM, Base with Nozzle

Product ID: 381-18706L

Accessories

Quantity: 1 Update

Sold By: Each
Item Total: $458.00

Save For Later Remove

John Boos E3S8-15-14 50 1/2" 3 Compartment Sink w/ 15"L x 15"W Bowl, 14" Deep

Product ID: 416-E3S81514

Accessories

Quantity: 1 Update

Sold By: Each
Item Total: $764.68

Save For Later Remove

Metro C5E9-CFC-U Full Height Non-Insulated Mobile Heated Cabinet w/ (12) Pan Capacity, 120v

Product ID: 001-C5E9CFCU

Quantity: 2 Update

Sold By: Each
Item Total: $4,206.00

Save For Later Remove

MoTak MR10-G24 60" 6 Burner Gas Range w/ Griddle & (2) Standard Ovens, Convertible

Product ID: 895-CR10G24N

Accessories

Quantity: 1 Update

Sold By: Each
Item Total: $2,874.00

Save For Later Remove

Subtotal **$8,302.68**

Commercial

at 32667

Calculate

Freight - $285.66

Chris Trowell

From: W.W.Gay <gnvquotes@wwgmc.com>
Sent: Wednesday, December 14, 2022 2:50 PM
To: Chris Trowell
Subject: 22-1611 Cuscowilla Kitchen Fixtures

Change Authorization 7-4

Proposal Number 22-1611

W.W. Gay Mechanical Contractor

352-264-2623

Tyler Holley

515 SE 11th Place, Gainsville, FL 32601

Licensing:CMC - 124841 | CFC - 1425962

Proposal Provided to:

Chris Trowell BBI Construction Management, Inc.

210 S.E. 134th Avenue, Micanopy, FL 32667 352-538-4231

Job Name: Cuscowilla Kitchen Fixtures

Building Name: Cuscowilla Main Lodge & Pool Building

Job Location: 210 SE 134 Ave, Micanopy, FL 32667

Scope: Labor and material to install owner provided 3-compartment sink and gas stove. Price includes connecting to existing water and indirect drain to floor sink, we will route gas from inside of kitchen to new gas range.

Excludes: Premium time, existing conditions, work upstream or downstream of new, any and all other repairs, gas piping on exterior of building, regulator, etc.

Comments:

We Propose hereby to furnish materiel and labor - complete in accordance with the above specifications, for the sum of: **$3,525.00.**

To accept this proposal, please sign/date below. All proposals are valid for 3 days from the date of issue.

Customer Signature:_____ Date: _____

W. W. GAY APPRECIATES THE OPPORTUNITY OF PROVIDING YOUR COMPANY WITH THIS PROPOSAL. IF YOU HAVE ANY QUESTIONS, PLEASE DON'T HESITATE TO CALL.

Unsubscribe

Change Authorization 7-5

13-P3751-950 and -966

®ACOUSTI ENGINEERING COMPANY OF FLORIDA
CG-C020791
www.acousti.com
14100 NW 126th Terrace, Alachua, FL 32615-4816
386-462-9900 - Phone

To: BBI CM
Attn: Chris Trowell
Phone: 352-538-4231
Email: c.trowell@bbi-cm.com
Job: Camp Cuscowilla

Date: 10.31.22
Address: Camp Cuscowilla, Micanopy, FL
Plan Date: January 2021
Addenda: 1, 2
Architect: Paul Stresing Associates

Thank you for allowing Acousti Engineering the opportunity of bidding this project for you. The pricing below is based on bid documents dated (Jan. 2021/ Addendums 1 & 2). All work bid is per these documents unless otherwise noted in this proposal.

Cuscowilla Main Lodge and Pool Building - COR for added QT wall base repair & LVT installation:

- Repair 72 LF/ 20 corner pieces new quarry tile base to match existing as closely as possible at pool building restrooms. Grout color to match existing to be Charcoal/ Grey or similar. Does not include demo/ patch & repair to adjacent floor tile/ repair to wall substrate.

- Add LVT to match new LVT used in main lodge at admin office. Includes stripping paint from slab, does not include moving/ storing furniture.
    - Note: The only LVT type alternative for this space which would not require removing or preping paint to provide adequate bond surface would be a rigid core floating LVT which would be more expensive but less invasive than removing paint/ installing glue-down LVT).
    - Does not include substantial prep except as indicated above.

$3,900

Scopes, terms, conditions, and qualifications as specifically outlined in Acousti's proposal shall be considered included and incorporates all conditions of said proposal with the clear understanding that they are part of the Agreement. Purchaser's acceptance of the intent of this proposal whether by this form or otherwise incorporates all conditions of this proposal. Subject to purchaser's acceptance by an authorized office or agent, within Thirty (30) says from date hereof.

Respectfully Submitted,

Acousti Engineering Company

Project Manager

®ACOUSTI
ENGINEERING
COMPANY OF FLORIDA
CG-C020791 www.acousti.com
14100 NW 126th Terrace, Alachua, FL 32615-4816
386-462-9900 - Phone

CONDITIONS & ACCEPTANCE

(1) So that we may ship material and organize our erection crew, purchaser shall notify us in writing at least four weeks before the building is ready for our work with work progressed to the extent that all our work can be done in one continuous operation.

(2) Purchaser shall make no charge against us for liquidated damages, clean-up, hoisting, watchman, telephone, broken glass, light, rubbish removal, or insurance. We will remove only that rubbish caused by us and pay for breakage caused by the negligence of our men.

(3) Purchaser shall furnish no labor or materials for us on our account without our written order, prior to the action.

(4) This proposal is based upon all labor being performed during regular hours of work. You shall pay us all additional costs, including insurance and overhead costs, of any overtime work, that may be requested by purchaser or his agent.

(5) Purchaser shall bear the risk of any loss or damage to materials delivered to the premises or installed by us, whether such loss or damage results from theft, misuse, fire, flood, or any other cause except our own negligence, and the purchaser shall reimburse us for any such loss or damage.

(6) We shall not be liable for any damages or delays caused by strikes, lockouts, embargoes, fires, car shortage, floods, tornadoes, accidents, inability to obtain materials from our regular sources of supply, or other causes beyond our reasonable control, and the time for delivery of materials or doing the work hereunder shall be extended for the time of delay or reason of any said causes.

(7) Purchaser shall furnish to us, without charge, a sufficient quantity and flow of water and sufficient electrical service for our equipment at convenient locations at working levels, and satisfactory storage space in the building from which we will not be required to remove our material except as required in our work. If a railroad siding is on the premises, we are to have free use of same within 150' of building.

(8) Purchaser shall furnish us with a complete set of plans, specifications, and addenda at least ten (10) weeks before building will be ready for our work.

(9) Purchaser shall furnish us with a progress schedule showing the coordination of the various trades at least ten (10) weeks before the schedule time for the commencement of work.

(10) Acousti Engineering Company of Florida assumes all liability for the collection and payment of Social Security and Unemployment Compensation Taxes on its employees.

(11) None of the material furnished under this contract shall be subjected to a temperature of higher than 140 degrees Fahrenheit.

(12) If this is a contract for a complete installation of our materials, we will pay all sales and/or use taxes in effect at the date of the Proposal. Any other or additional taxes will be paid by the Purchaser. If this is a contract for material sales only, purchaser will pay all sales and/or use taxes.

(13) Purchaser shall provide adequate protection for our finished work.

®ACOUSTI
ENGINEERING
COMPANY OF FLORIDA
CG-C020791 www.acousti.com
14100 NW 126th Terrace, Alachua, FL 32615-4816
386-462-9900 - Phone

TERMS

(1) Payment of the aforementioned price, together with payment of any extras that may be agreed upon between us, shall be made by purchaser to us as follows: On or before the tenth (10th) day of each month, ninety per cent (90%) of the value of the materials delivered upon the premises and the work performed during the next preceding calendar month. Final payments shall be made within thirty (30) days after the completion of our work embodied in the proposal. If an account of delays by purchaser or other trades or for any cause beyond our reasonable control, we are unable to complete our work, purchaser shall pay us in full on or before the tenth (10th) day of the calendar month following the month in which the work was suspended, for all materials delivered or in transit, and work performed by us up to the time of suspension of the work. If payments are not made in accordance with the terms hereof, it is agreed that interest on said unpaid balances at the maximum legal rate of interest prescribed by the laws of the State of Florida will become due for the period of default, and at our election we may suspend work until such payments are made, and all costs or expenses incurred by us in collecting any sum due hereunder, whether by suit or otherwise, including reasonable attorney's fees shall be paid by purchaser. All provisions of this contract shall be construed in accord with the laws of the Florida.
(2) A performance bond or other bond, if desired by the purchaser, shall be provided at your expense.

There are no promises, agreements, or understandings, between purchaser and us, not contained in this agreement.

®ACOUSTI
ENGINEERING
COMPANY OF FLORIDA
CG-C020791
www.acousti.com
14100 NW 126th Terrace, Alachua, FL 32615-4816
386-462-9900 - Phone

ACCEPTANCE

This proposal is subject to final approval by an authorized agent or officer of Acousti Engineering Company following acceptance by purchaser. Only when so accepted and finally approved shall this proposal constitute a contract between us.

ACCEPTED:
Contracting Company

_____

Authorized Signature

Sign _____

Date _____

APPROVED:
Acousti Engineering Company

_____

Authorized Signature (Acousti)

Sign _____

Date _____

TAYLOR,
COTTON &
RIDLEY, INC.

Change Authorization 7-6

DOOR, HARDWARE & BUILDING SPECIALTIES

4410 SW 35TH TERRACE
GAINESVILLE, FL. 32608
P.O. BOX 141090 32614-1090
PHONE (352) 378-1608

Date: October 7, 2022

To: BBI Construction

RE: Camp Cuscowilla – Pool Area (Restroom Door Dividers + added hardware)

Quote Expires in 30-days from posted date listed above

TCR is pleased to provide a quotation for the following items:

3 each HM Frames 16-gauge/A60 Galv. JD: 5-3/4"
*Punched & dimpled
3 each HM Doors 18-gauge/A60 Galv. Honeycomb core – FLUSH
*prepped to receive cylindrical lock only
1 each Wood Door – FLUSH – unfinished birch veneer – field finish by others
9 each Hinges
3 each BEST cylindrical lockset – permanent cores by others
3 each Stanley closers
1 each Sliding flat track with hangers – BLACK finish
5 each BEST deadbolts – permanent cores by others
1 LOT labor – modify existing doors to fit deadbolts
*All finishes to be brushed chrome/stainless steel/aluminum/matte black as applicable

Total Quote Amount: $ 10,973.00 *tax included*

Excludes frames installation – by others
Excludes any/all installation except modification of existing doors – remaining done by others
Excludes any/all caulking and/or paint finishing by others

Thanks,

Daniel Cole
Taylor Cotton & Ridley, Inc
PH:(352) 378-1608

Change Authorization 7-6

TAYLOR,
COTTON &
RIDLEY, INC.

DOOR, HARDWARE & BUILDING SPECIALTIES

4410 SW 35TH TERRACE
GAINESVILLE, FL. 32608
P.O. BOX 141090 32614-1090
PHONE (352) 378-1608

Date: October 7, 2022

To: BBI Construction

RE: Camp Cuscowilla – Pool Area (Restroom Door Dividers + added hardware)

Quote Expires in 30-days from posted date listed above

TCR is pleased to provide a quotation for the following items:

1 each Cormax interchangeable core 1CX-7X29X1 613
1 each Cormax Key Blank 1AX-1X29X KS717KS699 (FRKY)
*All finishes to be brushed chrome/stainless steel/aluminum/matte black as applicable

Total Quote Amount: $ 102.00 *tax included*

Excludes frames installation – by others
Excludes any/all installation except modification of existing doors – remaining done by others
Excludes any/all caulking and/or paint finishing by others

Thanks,

Daniel Cole
Taylor Cotton & Ridley, Inc
PH:(352) 378-1608

Change Authorization 7-6

SUPERIOR HARDWARE PRODUCTS
716 INDUSTRY ROAD, LONGWOOD FL 32750
Main Office - 407 339 6800 Fax - 407 397 7192
sales@superiorhardwareproducts.com

Quote

Quote # : **408930**
Quote Date : **Oct 20, 2022**
Expiration Date : **Dec 4, 2022**

Customer:
Alachua County Facilities Management
915 S.E. 5Th Street
Gainesville, FL 32601

Ship To:
Alachua County Facilities Management
915 S.E. 5Th Street
Gainesville, FL 32601

Account Code : 119
Terms : Net30
Customer Job # :
Salesperson : Mike Littlefield
Order Name : Core for Cuscowilla Lodge exterior door

Purchase Order # :
Shipped Via :

Supply Only (1) Best Coremax Bronze Core for Exterior Door of Main Lodge

Qty	Product Description	Unit Price	Extended Price
1	Cormax Core 1CX-7X29X1 613 (CC)	54.32	54.32
1	Cormax Key Blanks 1AX-1X29X1 KS717KS699 (FRKY) Free Test Key with Core	0.00	0.00

Description	Price
FLORIDA FREIGHT - TAX FREE	16.00

Pre-Tax Total	:	70.32
10013 - FL-Florida Non Taxable	:	0.00
Quote Total	**:**	**70.32**

Printed Oct 20, 2022 2:05 PM

Change Authorization 7-6

Robert J Grayson Inc
865 S Lawrence Blvd
Keystone Heights, FL 32656 US
robert.grayson56@gmail.com

Estimate

ADDRESS
BBI-Cuscowilla 4

ESTIMATE # Cuscowilla 4
DATE 10/12/2022

ACTIVITY	QTY	RATE	AMOUNT
Labor Install four frames, doors and hardware	1	1,500.00	1,500.00

SUBTOTAL	1,500.00
TAX	0.00
TOTAL	**$1,500.00**

Accepted By

Accepted Date

Change Authorization 7-7 & 7-8

Percent	Amount	Category	Hours	Job Cost Phase
8.57 %	17,898.00	Labor		
0.00 %	1.12	Material		
89.98 %	187,991.89	Subcontractor		
		Equipment		
1.46 %	3,040.00	Other		
		User		
	208,931.01	Net Costs		
		Labor Burden		
2.10 %	375.86	GL Insurance (Labor)		
0.24 %	458.48	GL Insurance (Non-Labor)		
13.00 %	0.15	Sales Tax Materials Div 1 - 7		
7.00 %		Sales Tax Contract Material Div 8 - 16		
	209,765.49	Subtotal		
0.38 %	797.11	Builder's Risk Insurance		
		Subcontract BOND????		
		Contingency		
0.07 %	150.00	Bond Recording		
		Pre-Construction Services		
	210,712.60	Subtotal		
9.00 %	18,964.13	CM Fee (9%)		
	229,676.74	Subtotal		
	1,108.23	Bldg Permit - Alachua County		
	221.65	Bldg Permit - Alachua C. Plan Review 20%		
	562.06	$5 M Gen Liability Umbrella		
	2,622.95	P & P Bond		
	234,191.62	Total Estimate		